LAN8710/LAN8710i

MII/RMII 10/100 Ethernet Transceiver with HP Auto-MDIX and flexPWR® Technology in a Small Footprint

PRODUCT FEATURES

Data Brief

Highlights

- Single-Chip Ethernet Physical Layer Transceiver (PHY)
- Comprehensive flexPWR® Technology
  - Flexible Power Management Architecture
  - Power savings of up to 40% compared to competition
  - LVCMOS Variable I/O voltage range: +1.6V to +3.6V
  - Integrated 1.2V regulator with disable feature
- HP Auto-MDIX support
- Small footprint 32 pin QFN lead-free RoHS compliant package (5 x 5 x 0.9mm height)

Target Applications

- Set-Top Boxes
- Networked Printers and Servers
- Test Instrumentation
- LAN on Motherboard
- Embedded Telecom Applications
- Video Record/Playback Systems
- Cable Modems/Routers
- DSL Modems/Routers
- Digital Video Recorders
- IP and Video Phones
- Wireless Access Points
- Digital Televisions
- Digital Media Adaptors/Servers
- Gaming Consoles
- POE Applications

Key Benefits

- High-Performance 10/100 Ethernet Transceiver
  - Compliant with IEEE802.3/802.3u (Fast Ethernet)
  - Compliant with ISO 802-3/IEEE 802.3 (10BASE-T)
  - Loop-back modes
  - Auto negotiation
  - Automatic polarity detection and correction
  - Link status change wake-up detection
  - Vendor specific register functions
  - Supports both MII and the reduced pin count RMII interfaces
- Power and I/Os
  - Various low power modes
  - Integrated power-on reset circuit
  - Two status LED outputs
  - Latch-Up Performance Exceeds 150mA per EIA/JESD 78, Class II
  - May be used with only a 3.3V supply
- Packaging
  - 32-pin QFN (5x5 mm) Lead-Free RoHS Compliant Package with MII and RMII
- Environmental
  - Extended Commercial Temperature Range (0°C to +85°C)
  - Industrial Temperature Range (-40°C to +85°C) version available (LAN8710i)

PRODUCT PREVIEW

ORDER NUMBER(S):

LAN8710A-EZK FOR 32-PIN, QFN LEAD-FREE ROHS COMPLIANT PACKAGE (0 TO +85°C TEMP)

LAN8710Ai-EZK FOR 32-PIN, QFN LEAD-FREE ROHS COMPLIANT PACKAGE (-40 TO +85°C TEMP)

LAN8710A-EZK-TR FOR 32-PIN, QFN LEAD-FREE ROHS COMPLIANT PACKAGE (0 TO +85°C TEMP)

LAN8710Ai-EZK-TR FOR 32-PIN, QFN LEAD-FREE ROHS COMPLIANT PACKAGE (-40 TO +85°C TEMP)

Reel Size is 4000

80 ARKAY DRIVE, HAUPPAUGE, NY 11788 (631) 435-6000, FAX (631) 273-3123

Copyright © 2009 SMSC or its subsidiaries. All rights reserved.

Circuit diagrams and other information relating to SMSC products are included as a means of illustrating typical applications. Consequently, complete information sufficient for construction purposes is not necessarily given. Although the information has been checked and is believed to be accurate, no responsibility is assumed for inaccuracies. SMSC reserves the right to make changes to specifications and product descriptions at any time without notice. Contact your local SMSC sales office to obtain the latest specifications before placing your product order. The provision of this information does not convey to the purchaser of the described semiconductor devices any licenses under any patent rights or other intellectual property rights of SMSC or others. All sales are expressly conditional on your agreement to the terms and conditions of the most recently dated version of SMSC's standard Terms of Sale Agreement dated before the date of your order (the "Terms of Sale Agreement"). The product may contain design defects or errors known as anomalies which may cause the product's functions to deviate from published specifications. Anomaly sheets are available upon request. SMSC products are not designed, intended, authorized or warranted for use in any life support or other application where product failure could cause or contribute to personal injury or severe property damage. Any and all such uses without prior written approval of an Officer of SMSC and further testing and/or modification will be fully at the risk of the customer. Copies of this document or other SMSC literature, as well as the Terms of Sale Agreement, may be obtained by visiting SMSC's website at http://www.smsc.com. SMSC is a registered trademark of Standard Microsystems Corporation ("SMSC"). Product names and company names are the trademarks of their respective holders.

SMSC DISCLAIMS AND EXCLUDES ANY AND ALL WARRANTIES, INCLUDING WITHOUT LIMITATION ANY AND ALL IMPLIED WARRANTIES OF MERCHANTABILITY, FITNESS FOR A PARTICULAR PURPOSE, TITLE, AND AGAINST INFRINGEMENT AND THE LIKE, AND ANY AND ALL WARRANTIES ARISING FROM ANY COURSE OF DEALING OR USAGE OF TRADE. IN NO EVENT SHALL SMSC BE LIABLE FOR ANY DIRECT, INCIDENTAL, INDIRECT, SPECIAL, PUNITIVE, OR CONSEQUENTIAL DAMAGES; OR FOR LOST DATA, PROFITS, SAVINGS OR REVENUES OF ANY KIND; REGARDLESS OF THE FORM OF ACTION, WHETHER BASED ON CONTRACT; TORT; NEGLIGENCE OF SMSC OR OTHERS; STRICT LIABILITY; BREACH OF WARRANTY; OR OTHERWISE; WHETHER OR NOT ANY REMEDY OF BUYER IS HELD TO HAVE FAILED OF ITS ESSENTIAL PURPOSE, AND WHETHER OR NOT SMSC HAS BEEN ADVISED OF THE POSSIBILITY OF SUCH DAMAGES.

General Description

The LAN8710/LAN8710i is a low-power 10BASE-T/100BASE-TX physical layer (PHY) transceiver that transmits and receives on unshielded twisted-pair cable. A typical system application is shown in Figure 1, "LAN8710/LAN8710i System Block Diagram". It is available in both extended commercial and industrial temperature operating versions.

The LAN8710/LAN8710i interfaces to the MAC layer using a variable voltage digital interface via the standard MII (IEEE 802.3u). Support for RMII makes a reduced pin-count interface available. The digital interface pins are tolerant to 3.6V.

The LAN8710/LAN8710i implements auto-negotiation to automatically determine the best possible speed and duplex mode of operation. HP Auto-MDIX support allows using a direct connect LAN cable, or a cross-over path cable.

The LAN8710 referenced throughout this document applies to both the extended commercial temperature and industrial temperature components. The LAN8710i refers to only the industrial temperature component.

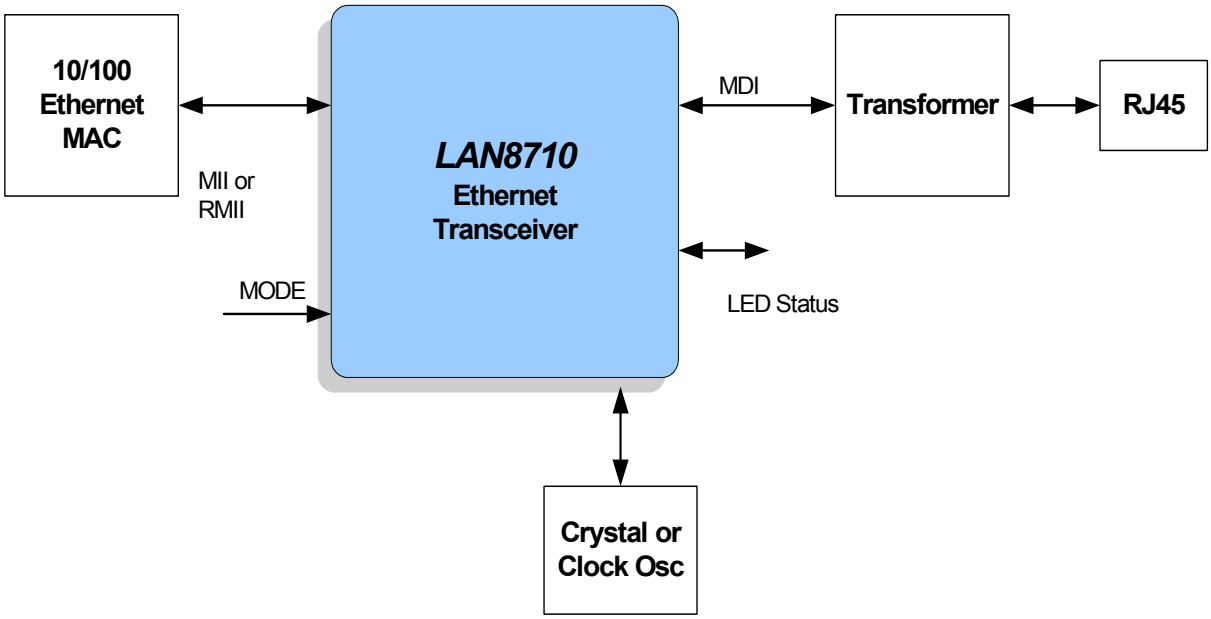

Figure 1 LAN8710/LAN8710i System Block Diagram

Package Outline

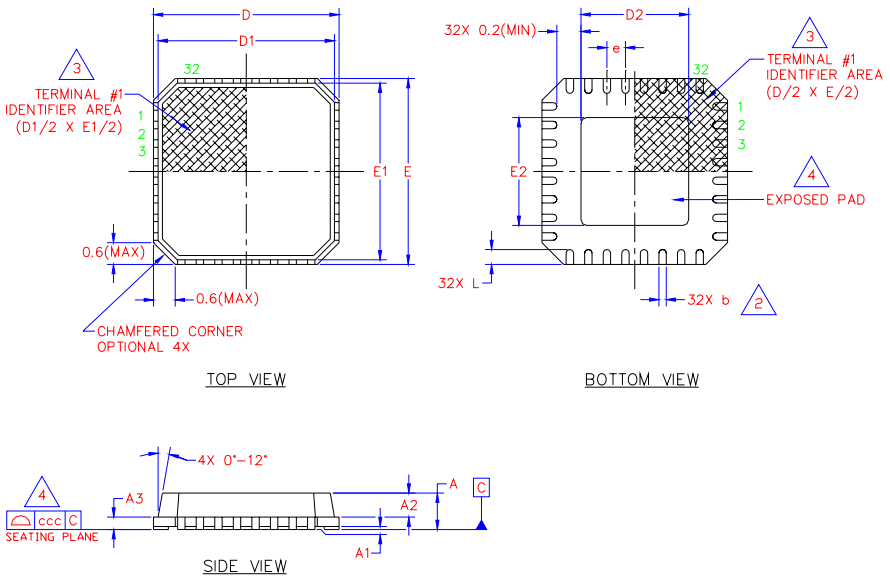

Figure 2 LAN8710/LAN8710i-EZK 32 Pin QFN Package Outline, 5 x 5 x 0.9 mm Body (Lead-Free)

Table 1 32 Terminal QFN Package Parameters

	MIN	NOMINAL	MAX	REMARKS
A	0.70	~	1.00	Overall Package Height
A1	0	0.02	0.05	Standoff
A2	~	~	0.90	Mold Thickness
A3		0.20 REF		Copper Lead-frame Substrate
D	4.85	5.0	5.15	X Overall Size
D1	4.55	~	4.95	X Mold Cap Size
D2	3.15	3.3	3.45	X exposed Pad Size
E	4.85	5.0	5.15	Y Overall Size
E1	4.55	~	4.95	Y Mold Cap Size
E2	3.15	3.3	3.45	Y exposed Pad Size
L	0.30	~	0.50	Terminal Length
e		0.50 BSC		Terminal Pitch
b	0.18	0.25	0.30	Terminal Width
ccc	~	~	0.08	Coplanarity

Notes:

1. Controlling Unit: millimeter.
2. Dimension b applies to plated terminals and is measured between 0.15mm and 0.30mm from the terminal tip. Tolerance on the true position of the leads is ± 0.05 mm at maximum material conditions (MMC).
3. Details of terminal #1 identifier are optional but must be located within the zone indicated.
4. Coplanarity zone applies to exposed pad and terminals.